PG020

sales@brannan.co.uk
+44 (0)1946 816600
brannan.co.uk

Commercial pressure gauge

Product features:

- Pressure gauge with bezel
- Adjustable loose red pointer
- Wide choice of pressure ranges (also available in metres and feet ranges)
- For dry indoor installations
- Wide range of associated accessories available
- **Brannan** quality and accuracy

Applications:

- Heating, ventilation, air-conditioning
- Plumbing
- Compressors
- Air filters
- Pneumatics

Standard product specifications:

	PG020 - 100mm diameter dials - stainless steel bezel	PG020 - 150mm diameter dials - black steel bezel
Standards & categories		
Design	BS EN 837 / ASME B40.100	BS EN 837 / ASME B40.100
Safety category	S1 (blow-out device gauge)	S1 (blow-out device gauge)
Gauge construction		
Case	Black steel	Black steel
Connection orientation	Bottom & centre back	Bottom entry only
Connection material	Brass	Brass
Bezel	Stainless steel - rolled	Black steel
Pointer	Black aluminium and loose red pointers	Black aluminium
Measuring principle	Bourdon tube phosphor bronze	Bourdon tube phosphor bronze
Movement	Cu-Alloy	Cu-Alloy
Window	Acrylic, snap fit	Glass
Ranges & parameters		
Dial diameters	100mm (4”)	150mm (6”)
Ranges	-1 to 9 bar & -15 to 130 psi through to 0 to 700 bar & 0 to 10150 psi	-1 to 9 bar & -15 to 130 psi through to 0 to 700 bar & 0 to 10150 psi
Thread size	3/8” & 1/2” BSP/NPT/BSPT (others available on request)	3/8” BSP Brass bottom entry only (others available on request)
Accuracy class	1.6% (Class 1.0 available on request)	1.6% (Class 1.0 available on request)
Filling	Dry	Dry
Working pressure	Steady: 75% full scale range, fluctuating: 60% full scale range, short time: full scale range	Steady: 75% full scale range, fluctuating: 60% full scale range, short time: full scale range
Operating temperature	Ambient: -20 to +60°C, medium: -20 to +60°C	Ambient: -20 to +60°C, medium: -20 to +60°C
Storage temperature	-40 to +60°C	-40 to +60°C
Protection	IP 43	IP 43
Temperature effect	When temperature of the pressure element deviates from reference temperature of 20°C the maximum additional error is +/-0.4 per 10°C of the span rising and falling	When temperature of the pressure element deviates from reference temperature of 20°C the maximum additional error is +/-0.4 per 10°C of the span rising and falling
Optional extras		
Calibration	UKAS certification, certificate traceable to recognised national standard or statement of conformity	UKAS certification, certificate traceable to recognised national standard or statement of conformity
Accessories	Syphon, needle valve, gauge cock, snubber	Syphon, needle valve, gauge cock, snubber

PG020

sales@brannan.co.uk
+44 (0)1946 816600
brannan.co.uk

Commercial pressure gauge

Product dimensions:

Bottom entry

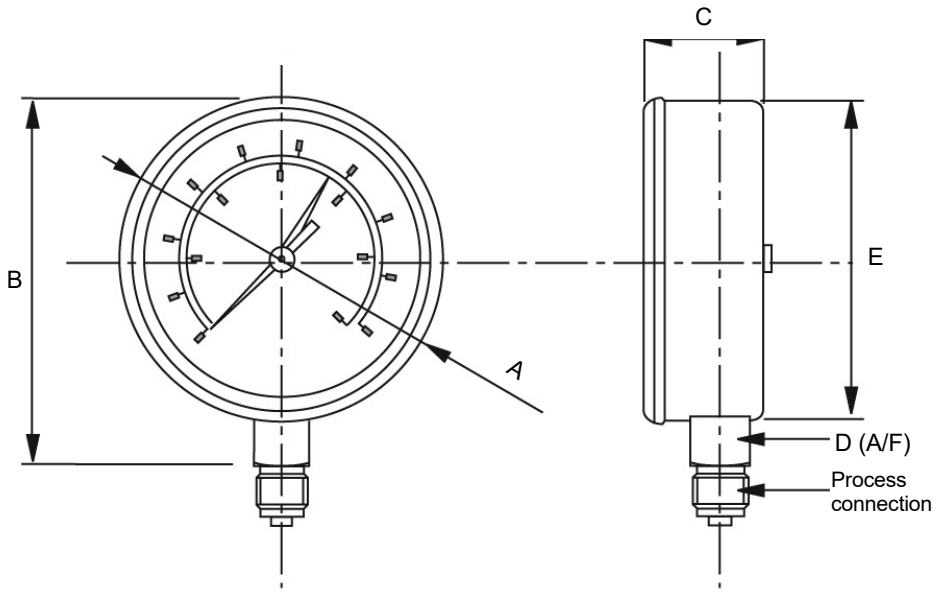

Back entry

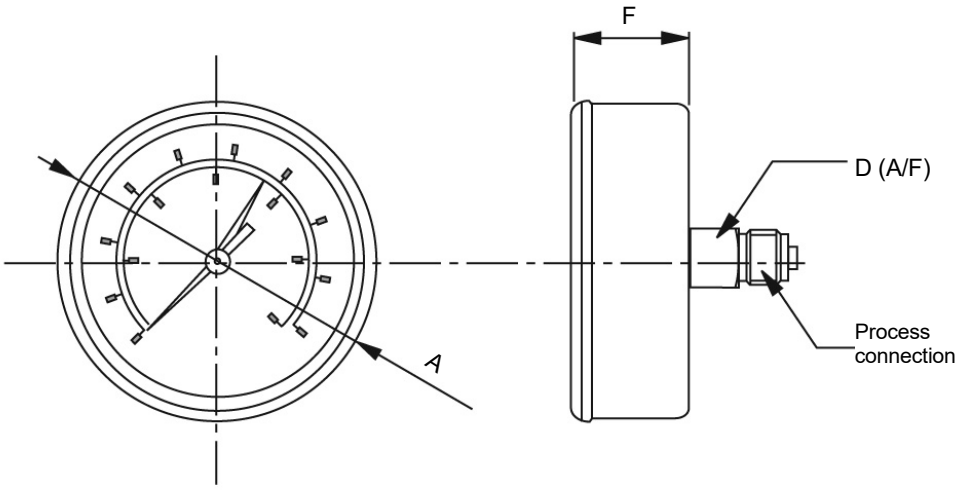

Dial diameter	Connection	ØA	B	C	D (A/F)	ØE	F
100mm (4.0”)	3/8” BSP	98.0mm	112.0mm	36.0mm	17mm	97.0mm	36.0mm
100mm (4.0”)	1/2” BSP	98.0mm	110.0mm	36.0mm	22mm	97.0mm	-
150mm (6.0”)	3/8” BSP	150.0mm	164.0mm	42.5mm	17mm	149.0mm	-

Standard product weights:

Dial diameter	Orientation	Box dimensions	Net weight	Box weight	Total weight
100mm (4.0”)	Bottom	130 x 109 x 41mm	316g	27g	343g
100mm (4.0”)	Back	108 x 108 x 80mm	257g	42g	299g
150mm (6.0”)	Bottom	198 x 166 x 50mm	759g	60g	819g

PG020

sales@brannan.co.uk
+44 (0)1946 816600
brannan.co.uk

Commercial pressure gauge

Product numbers:

The following products are usually kept in stock at Brannan and can therefore be ordered on the below numbers:

Ø100mm dial pressure gauge (bar outer, psi inner)

Range (bar dominant)	Bottom connection			Back connection
	3/8” BSP	1/2” BSP	1/2” NPT	3/8” BSP
0 to 1 bar & psi	34/651/0	34/651/1	-	34/741/0
0 to 2.5 bar & psi	34/652/0	34/652/1	-	34/742/0
0 to 4 bar & psi	34/653/0	34/653/1	-	34/743/0
0 to 6 bar & psi	34/654/0	34/654/1	-	34/744/0
0 to 10 bar & psi	34/655/0	34/655/1	34/655/3	34/745/0
0 to 16 bar & psi	34/656/0	34/656/1	34/656/3	34/746/0
0 to 20 bar & psi	-	34/647/1	-	-
0 to 25 bar & psi	34/657/0	34/657/1	34/657/3	34/747/0
0 to 40 bar & psi	34/658/0	34/658/1	-	-

Ø100mm dial pressure gauge (psi outer, bar inner)

Range (psi dominant)	Bottom connection		
	3/8” BSP	1/2” BSP	1/2” NPT
0 to 160 psi & bar	-	35/205/1	-
0 to 230 psi & bar	-	35/206/1	-
0 to 300 psi & bar	-	35/207/1	-

Ø150mm dial pressure gauge (bar outer, psi inner)

Range (bar dominant)	Product number
0 to 6 bar & psi	34/574/0
0 to 10 bar & psi	34/575/0
0 to 16 bar & psi	34/576/0
0 to 25 bar & psi	34/577/0

Other PG020 dials are ordered to specific customer specifications.
Please use below matrix to create your unique ordering product reference, using the values in bold.

Make	Model	Dial diameter	Range	Units	Connection size	Connection orientation	Extras
Brannan **(BRN)**	PG020 **(PG20)**	100mm (4”) **(100)** 150mm (6”) **(150)** NB. 100mm is stainless steel bezel. 150mm is black steel bezel unless discussed otherwise.	-1 to 9 bar **(-1+9)** -30 to 130 Hg/Psi **(-30+130)** through to 0 to 700 bar **(0+700)** 0 to 10150 Psi **(0+10150)**	Bar only (black) **(B)** Psi only (black) **(P)** Bar outer (black) / psi inner (red) **(BP)** Psi outer (red) / bar inner (black) **(PB)** kPa outer (black) / Psi inner (red) **(KP)** Psi outer (red) / kPa inner (black) **(PK)** NB. Other units available on request	3/8” BSP **(5)** 3/8” NPT **(6)** 1/2” BSP **(7)** 1/2” NPT **(8)** 3/8” BSPT **(11)** 1/2” BSPT **(12)** NB. Other units available on request	Bottom **(BO)** Centre back **(CB)** NB. 150mm bottom entry only	Front flange **(FF)** Back flange **(BF)** No loose red pointer **(NLRP)** NB. When more than one extra is required, separate each code with a hyphen when building your product reference.

Order example:

Make	Model	Dial diameter	Range	Units	Connection size	Connection orientation	Extras
BRN	**PG20**	**100**	**0+40**	**BP**	**5**	**BO**	

Product reference: BRNPG20/100/0+40/BP/5/BO

PG020

sales@brannan.co.uk
+44 (0)1946 816600
brannan.co.uk

Commercial pressure gauge

Calibration product numbers:

Calibration	No of points	Product number
UKAS	5pt	49/075/0
Traceable to National Standards	5pt	49/060/0

Other calibration types available on request

Pre-calibrated pressure gauges

Brannan offer a range of pressure gauges supplied complete with 5 point calibration certificate, available for immediate despatch.

Product numbers:

The following pre-calibrated pressure gauges are Ø100mm, 3/8” BSP bottom connection.

Range	Pre-calibrated product number
0 to 2.5 bar & psi	34/652/9
0 to 4 bar & psi	34/653/9
0 to 6 bar & psi	34/654/9
0 to 10 bar & psi	34/655/9
0 to 16 bar & psi	34/656/9
0 to 25 bar & psi	34/657/9
0 to 40 bar & psi	34/658/9

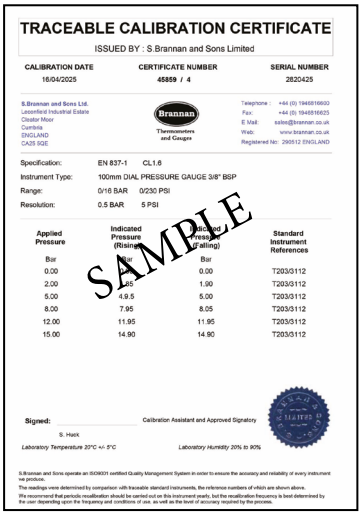

TRACEABLE CALIBRATION CERTIFICATE

ISSUED BY : S.Brannan and Sons Limited

CALIBRATION DATE	CERTIFICATE NUMBER	SERIAL NUMBER
16/04/2025	45859 / 4	2820425

S.Brannan and Sons Ltd.
Leconfield Industrial Estate
Cleator Moor
Cumbria
ENGLAND
CA25 5QE

Brannan
Thermometers and Gauges

Telephone : +44 (0) 1946816600
Fax: +44 (0) 1946816625
E Mail : sales@brannan.co.uk
Web: www.brannan.co.uk
Registered No: 290512 ENGLAND

Specification: EN 837-1 CL1.6
Instrument Type: 100mm DIAL PRESSURE GAUGE 3/8" BSP
Range: 0/16 BAR 0/230 PSI
Resolution: 0.5 BAR 5 PSI

SAMPLE

Applied Pressure	Indicated Pressure (Rising)	Indicated Pressure (Falling)	Standard Instrument References
Bar	Bar	Bar	
0.00	[illegible]	0.00	T203/3112
2.00	[illegible]	1.90	T203/3112
5.00	4.9.5	5.00	T203/3112
8.00	7.95	8.05	T203/3112
12.00	11.95	11.95	T203/3112
15.00	14.90	14.90	T203/3112

Signed: Calibration Assistant and Approved Signatory
S. Hack

Laboratory Temperature 20°C +/- 5°C
Laboratory Humidity 20% to 90%

S.Brannan and Sons operate an ISO9001 certified Quality Management System in order to ensure the accuracy and reliability of every instrument we produce.
The readings were determined by comparison with traceable standard instruments, the reference numbers of which are shown above.
We recommend that periodic recalibration should be carried out on this instrument yearly, but the recalibration frequency is best determined by the user depending upon the frequency and conditions of use, as well as the level of accuracy required by the process.

Product accessories:

Please see accessories section of this catalogue for associated items for use with these gauges.

- Syphons
- Adaptors
- Gauge cocks
- Ball valves
- Snubbers

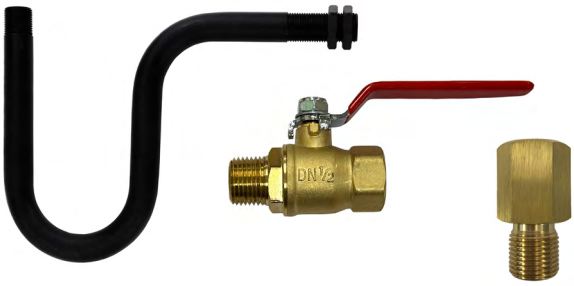

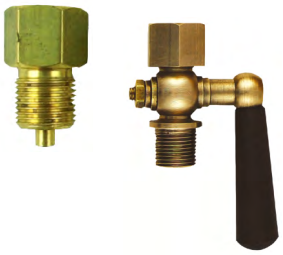

View me on the website