DS006

sales@brannan.co.uk
+44 (0)1946 816600
brannan.co.uk

Diaphragm seal - Heavy duty 2pc industrial type



Product features:

- 2-piece heavy duty construction
- Diaphragm welded to housing
- Various fill fluids available
- A choice of diaphragm materials to allow suitability with a wide range of processes
- Flushing connection optional
- **Brannan** quality

Applications:

- Oil and gas
- Process industry
- Chemical and petrochemical

Standard product specifications:

Type	2-piece construction, diaphragm welded to housing
Mounting	Direct mounting (please contact us for remote mounting options)
Diaphragm material*	Stainless steel 316L, Hastelloy C, Monel,
Lower housing material*	Stainless steel 316, stainless steel 316L, Hastelloy-C, PVC, polypropylene
Upper housing material*	Stainless steel 304, stainless steel 316, stainless steel 316L
Instrument connection	1/4", 3/8", 1/2" BSP/NPT female
Process connection	1/4", 3/8", 1/2", 3/4" BSP/NPT male or female
Max pressure	Standard; 100 bar, high pressure; 400 bar
Process temperature	Dependent on fill fluid, see below for details
Filling fluid	Flurolube (-40 to 235°C) Silicone DC200 (-40 to 200°C) Syltherm 800 (-40 to 315°C) (others available on request)
Fill port	On the side – set screw
Flushing connection	Optional (1/2" & 1/2" BSP/NPT)

*other materials available on request

DS006

sales@brannan.co.uk
+44 (0)1946 816600
brannan.co.uk

Diaphragm seal - Heavy duty 2pc industrial type

Product dimensions:

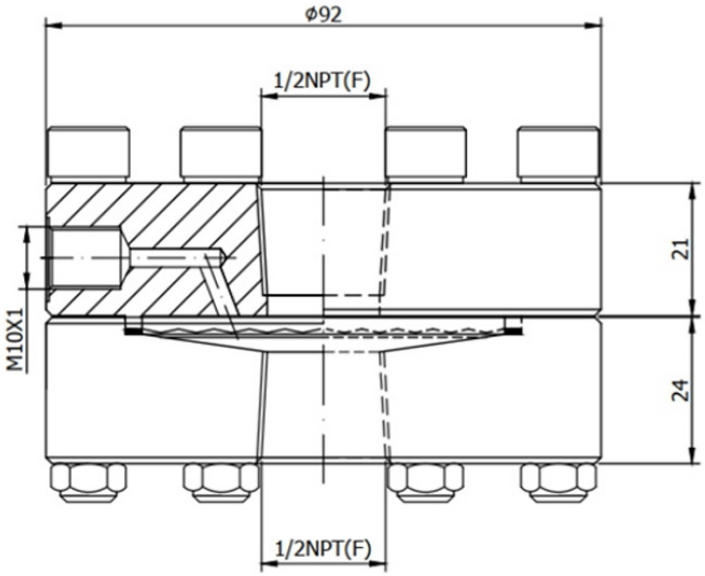

DS006

sales@brannan.co.uk
+44 (0)1946 816600
brannan.co.uk

Diaphragm seal - Heavy duty 2pc industrial type

Product numbers:

All DS006 diaphragm seals are ordered to specific customer specifications.
Please use the below matrix to create your unique product reference, using the values in bold.

Make	Model	Max pressure	Diaphragm material	Upper housing	Lower housing	Process connection (M or F)	Instrument connection	Filling fluid	Extras
Brannan **(BRN)**	DS006 **(DS006)**	100 bar **(STD)** 400 bar **(HIGH)**	SS 316L **(316L)** Hastelloy-C **(HAS)** Monel **(MON)**	SS 304 **(USS304)** SS 316 **(USS316)** SS 316L **(USS316L)**	SS 316 **(LSS316)** SS 316L **(LSS316L)** Hastelloy-C **(LSSHAS)**	1/4" BSP (M) **(M3)** 1/4" BSP (F) **(F3)** 1/4" NPT (M) **(M4)** 1/4" NPT (F) **(F4)** 3/8" BSP (M) **(M5)** 3/8" BSP (F) **(F5)** 3/8" NPT (M) **(M6)** 3/8" NPT (F) **(F6)** 1/2" BSP (M) **(M7)** 1/2" BSP (F) **(F7)** 1/2" NPT (M) **(M8)** 1/2" NPT (F) **(F8)**	1/4" BSP **(3)** 1/4" NPT **(4)** 3/8" BSP **(5)** 3/8" NPT **(6)** 1/2" BSP **(7)** 1/2" NPT **(8)**	Flurolube (-40 to 235°C) **(FLU)** Silicone DC200 (-40 to 305°C) **(S)** Syltherm 800 (-40 to 315°C) **(SY800)**	Nace Certificate (MR0175/ISO15156 and/or MR0103/ISO17945) **(NACE)*** Materials Test Certificate **(MTC)** 1/2" NPT F Flushing Connection **(FC8)** 1/2" BSP F Flushing Connection **(FC7)** 1/4" NPT F Flushing Connection **(FC4)** 1/4" BSP F Flushing Connection **(FC3)** * Specific wetted materials only. NB. When more than one extra is required, separate each code with a hyphen when building your product reference.

Order example:

Make	Model	Max pressure	Diaphragm material	Upper housing	Lower housing	Process connection (M or F)	Instrument connection	Filling fluid	Extras
BRN	**DS06**	**STD**	**MON**	**USS304**	**LSS316L**	**F7**	**7**	**S**	**FC7**

Product reference: BRNDS06/STD/MON/USS304/LSS316L/F7/7/S/FC7