# DS005

sales@brannan.co.uk
+44 (0)1946 816600
brannan.co.uk

## Diaphragm seal - High pressure seal



### Product features:

- Fully welded design
- Compact
- Stainless steel construction (other materials also available)
- **Brannan** quality

### Applications:

- Oil and gas
- Process industry
- Chemical and petrochemical

### Standard product specifications:

| | |
|---|---|
| **Type** | Fully welded |
| **Mounting** | Direct mounting |
| **Accuracy** | +/- 0.5% plus accuracy of mounted instrument |
| **Housing material** | SS 316, SS 316L, Hastelloy-C |
| **Diaphragm material** | SS 316L, Hastelloy-C |
| **Instrument connection** | 3/8'', 1/2" BSP/NPT |
| **Process connection** | 3/8'', 1/2" BSP/NPT |
| **Pressure range** | 100 bar to 400 bar (optional up to 700 bar) |
| **Filling fluid** | Glycerine (-18 to 204°C)<br>Silicone (-40 to 305°C)<br>Halocarbon (-56 to 149°C)<br>Syltherm 800 (-40 to 400°C) |
| **Flushing connection** | ¼" NPT F (optional) |

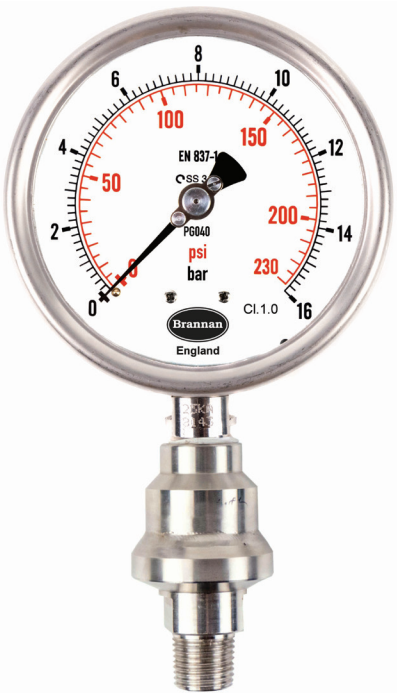

# DS005

sales@brannan.co.uk
+44 (0)1946 816600
brannan.co.uk

## Diaphragm seal - High pressure seal

### Product dimensions:

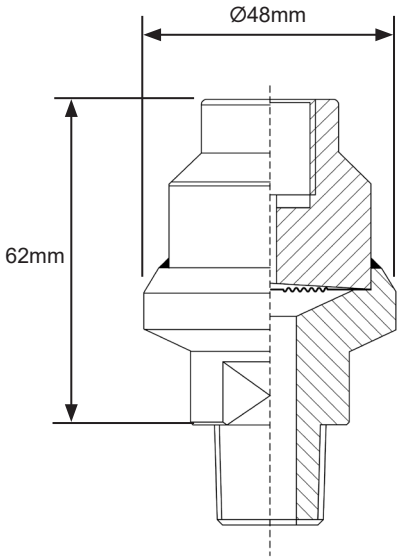


### Product numbers:

All DS005 diaphragm seals are ordered to specific customer specifications.
Please use the below matrix to create your unique product reference, using the values in bold.

| Make | Model | Diaphragm material | Housing material | Process connection | Instrument connection | Filling Fluid | Extras |
|---|---|---|---|---|---|---|---|
| Brannan **(BRN)** | DS005 **(DS005)** | SS 316L **(316L)**<br><br>Hastelloy-C **(HAS)** | SS 316 **(316)**<br><br>SS 316L **(316L)**<br><br>Hastelloy-C **(HAS)** | 3/8" BSP (M) **(5)**<br><br>3/8" NPT (M) **(6)**<br><br>1/2" BSP (M) **(7)**<br><br>1/2" NPT (M) **(8)** | 3/8" BSP **(5)**<br><br>3/8" NPT **(6)**<br><br>1/2" BSP **(7)**<br><br>1/2" NPT **(8)** | Glycerine (-18 to 204°C) **(G)**<br><br>Silicone (-40 to 305°C) **(S)**<br><br>Halocarbon (-56 to 149°C) **(H)**<br><br>Syltherm 800 (-40 to 400°C) **(SY800)** | Nace Certificate (MR0175/ISO15156 and/or MR0103/ISO17945) **(NACE)***<br><br>Materials Test Certificate **(MTC)**<br><br>1/4" NPT F Flushing Connection **(FC4)**<br><br>* Specific wetted materials only.<br><br>NB. When more than one extra is required, separate each code with a hyphen when building your product reference. |

### Order example:

| Make | Model | Diaphragm material | Housing material | Process connection | Instrument connection | Filling Fluid | Extras |
|---|---|---|---|---|---|---|---|
| **BRN** | **DS05** | **316L** | **316** | **8** | **8** | **G** | **FC4** |

**Product reference:** BRNDS05/316L/316/8/8/G/FC4