DS004

sales@brannan.co.uk
+44 (0)1946 816600
brannan.co.uk

Diaphragm seal - Sanitary type

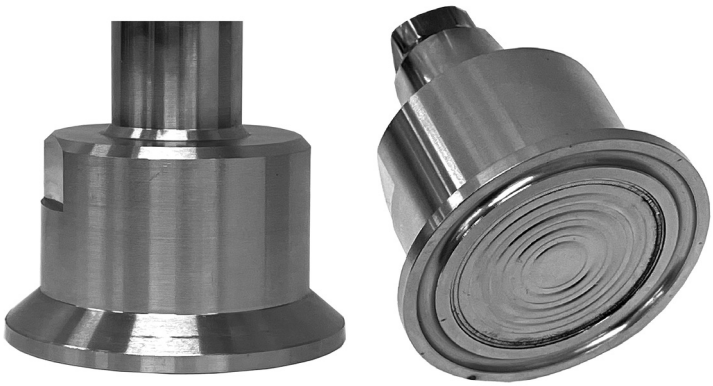

Product features:

- Easy to clean
- Can be removed from the process quickly
- Flush welded diaphragm seal that prevents clogging
- Prevents process media from entering the internals of the instruments and becoming contaminated
- Designed to enable fast, residue-free, cleaning
- 1 ½'' or 2'' designs
- Can be supplied with or without tri-clamp and gasket
- **Brannan** quality

Applications:

- Dairy
- Pharmaceutical
- Food and beverage

Standard product specifications:

Type	Sanitary seal with welded diaphragm
Mounting	Direct mounting
Diaphragm material	Stainless steel 316L
Housing material	Stainless steel 316
Process connection	1½'' (40mm) sanitary seal 2'' (50mm) sanitary seal 2½'' (63mm) sanitary seal
Instrument connection	1/4'', 3/8'' or 1/2'' BSP/NPT female
Max pressure	40 bar
Process temperature	-20 to +140°C
Filling fluid	Food grade oil (others available on request)
Fill port	M6



DS004

sales@brannan.co.uk
+44 (0)1946 816600
brannan.co.uk

Diaphragm seal - Sanitary type

Product dimensions:

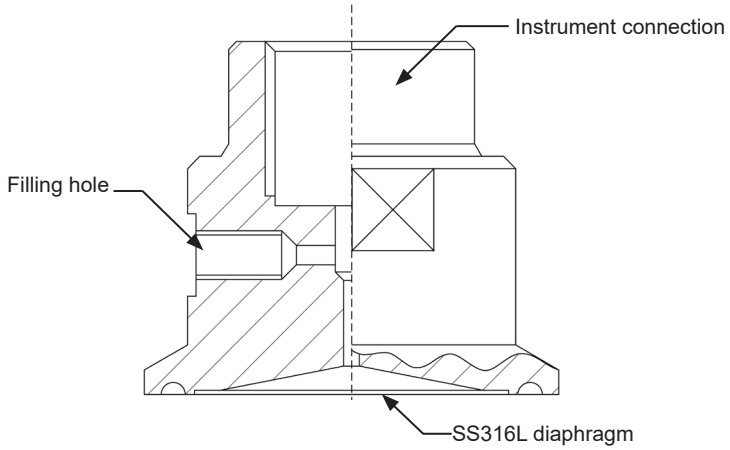

Product numbers:

All DS004 diaphragm seals are ordered to specific customer specifications.
Please use below matrix to create your unique product reference, using the values in bold.

Make	Model	Instrument connection	Size	Extras
Brannan **(BRN)**	DS004 **(DS004)**	1/4" BSP **(3)** 1/4" NPT **(4)** 3/8" BSP **(5)** 3/8" NPT **(6)** 1/2" BSP **(7)** 1/2" NPT **(8)**	1½" **(1.5)** 2" **(2)** 2½" **(2.5)**	Clamp **(CLA)** Gasket **(GAS)** NB. When more than one extra is required, separate each code with a hyphen when building your product reference.

Order example:

Make	Model	Instrument connection	Size	Extras
BRN	**DS004**	**3**	**1.5**	**CLA-GAS**

Product reference: BRNDS004/3/1.5/CLA-GAS