DS003

sales@brannan.co.uk
+44 (0)1946 816600
brannan.co.uk

Diaphragm seal - 2pc industrial type



Product features:

- Protects gauge from corrosion
- 2-piece construction
- Metal diaphragm with Teflon gasket
- Removable top and bottom housing
- Various fill fluids available
- A choice of diaphragm materials to allow suitability with a wide range of processes
- Flushing connection optional
- **Brannan** quality

Applications:

- Oil and gas
- Process industry
- Chemical and petrochemical

Standard product specifications:

Type	2-piece construction – bottled upper and lower housing Diaphragm welded to upper housing
Mounting	Direct mounting (please contact us for remote mounting options)
Diaphragm material	Stainless steel 316L, Hastelloy C, Monel
Lower housing material	Stainless steel 316, stainless steel 316L, Hastelloy-C, PVC, polypropylene
Upper housing material	Stainless steel 304, stainless steel 316
Clamp rings	Stainless steel 304
Nuts & bolts	Stainless steel
Instrument connection material	Stainless steel 304
Instrument connection	3/8", 1/2" BSP/NPT Female
Process connection	1/2" BSP/NPT Male or female
Max pressure	100 bar (metal bottom housing 10 bar (other bottom housing)
Process temperature	Dependent on fill fluid, see below for details
Filling fluid	Glycerine (-18 to 204°C) Silicone (-40 to 305°C) Halocarbon (-56 to 149°C) Syltherm 800 (-40 to 400°C)
Fill port	On the side – set screw
Flushing connection	Optional (1/4" & 1/2" BSP/NPT)

DS003

sales@brannan.co.uk
+44 (0)1946 816600
brannan.co.uk

Diaphragm seal - 2pc industrial type

Product dimensions:

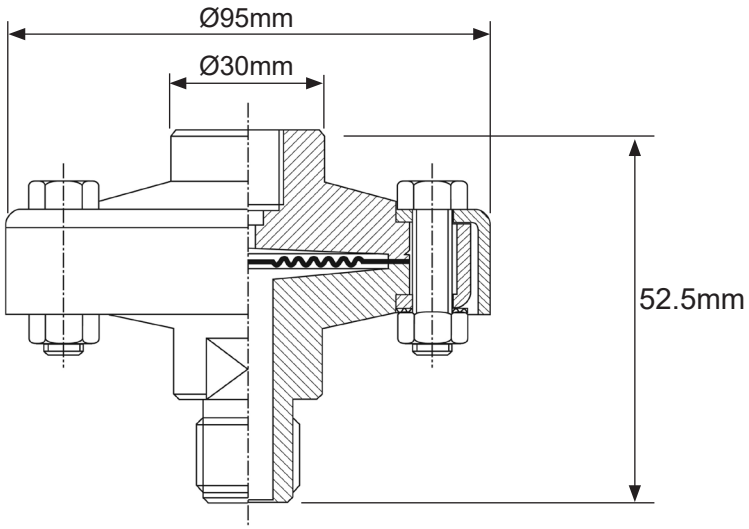

DS003

sales@brannan.co.uk
+44 (0)1946 816600
brannan.co.uk

Diaphragm seal - 2pc industrial type

Product numbers:

All DS003 diaphragm seals are ordered to specific customer specifications. Please use below matrix to create your unique product reference, using the values in bold.

Make	Model	Diaphragm material	Upper housing	Lower housing	Process connection (M or F)	Instrument connection (F)	Filling fluid	Extras
Brannan **(BRN)**	DS003 **(DS03)**	SS 316L **(316L)** Monel **(MON)** Hastelloy C **(HAS)** Inconel **(INC)** Tantalum **(TAN)**	SS 304 **(USS304)** SS 316 **(USS316)**	SS 316 **(LSS316)** SS 316L **(LSS316L)** Hastelloy C **(LHAS)** PVC **(LPVC)** Polypropylene **(LPOL)**	1/2" BSP (M) **(M7)** 1/2" BSP (F) **(F7)** 1/2" NPT (M) **(M8)** 1/2" NPT (F) **(F8)** Others available on request	1/4" BSP **(3)** 1/4" NPT **(4)** 3/8" BSP **(5)** 3/8" NPT **(6)** 1/2" BSP **(7)** 1/2" NPT **(8)**	Glycerine (-18 to 204°C) **(G)** Silicone (-40 to 305°C) **(S)** Halocarbon (-56 to 149°C) **(H)** Syltherm 800 (-40 to +400°C) **(SY800** Others available on request	Nace Certificate (MR0175/ISO15156 and/or MR0103/ISO17945) **(NACE)*** Materials test certificate **(MTC)** Flushing connection 1/2" NPT **(FC8)** Flushing connection 1/2" BSP **(FC7)** Flushing connection 1/4" NPT **(FC4)** Flushing connection 1/4" BSP **(FC3)** * Specific wetted materials only. NB. When more than one extra is required, separate each code with a hyphen when building your product reference.

Order example:

Make	Model	Diaphragm material	Upper housing	Lower housing	Process connection (M or F)	Instrument connection (F)	Filling fluid	Extras
BRN	**DS03**	**316L**	**USS316**	**LSS316**	**F8**	**8**	**S**	**MTC-FC8**

Product reference: BRNDS03/316L/USS316/LSS316/F8/8/S/MTC-FC8